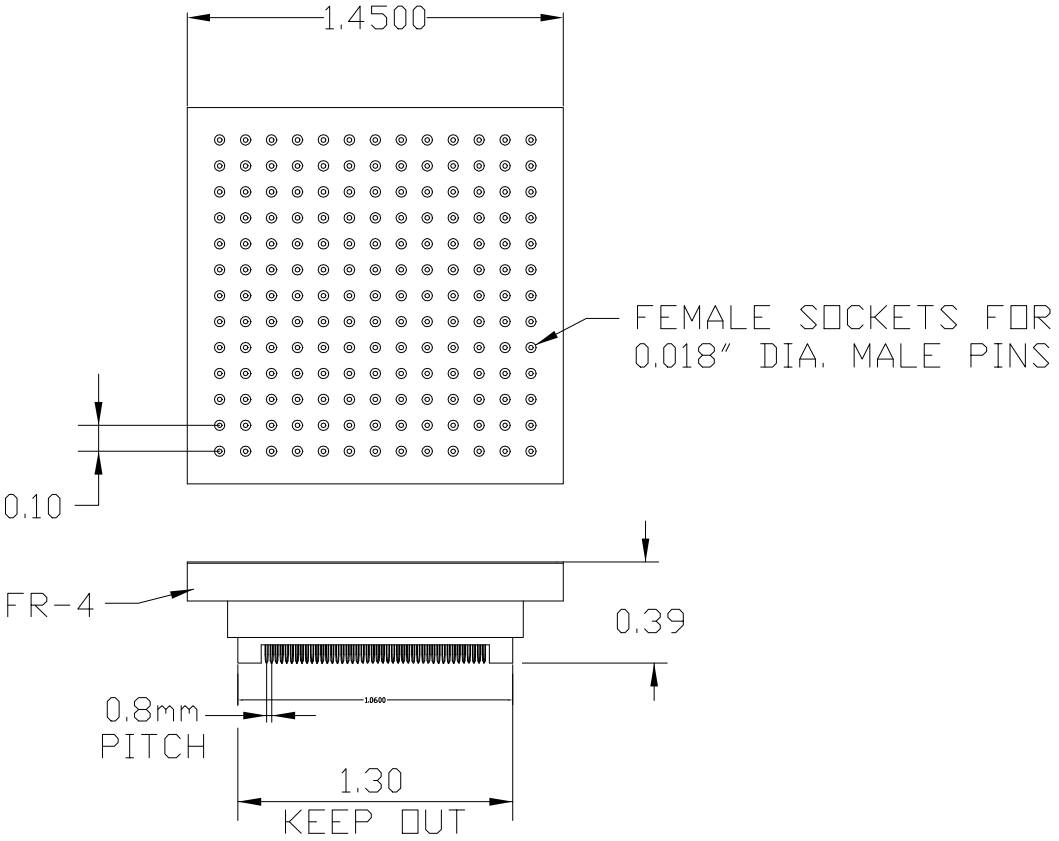

200020

128 PIN, .8mm, PQFP DELTA Probe®

(SQUARE)

DIMENSIONS ARE IN INCHES